SECTION P/N	LENGTH	LEGS	BRACES
R1	10' (3)	RSLL-1 U 2 3/4" X 3/16" (U 70 X 4.8 mm)	RSLD-1 1"Ø X 18GA. (25Ø x 1.2 mm)
R2	10' (3)	RSLL-2 U 2 3/4" X 3/16" (U 70 X 4.8 mm)	RSLD-2 1"Ø X 18GA. (25Ø x 1.2 mm)
R3	10' (3)	RSLL-3 U 2 3/4" X 3/16" (U 70 X 4.8 mm)	RSLD-3 1"Ø X 18GA. (25Ø x 1.2 mm)
R4	10' (3)	RSLL-4 U 2 3/4" X 3/16" (U 70 X 4.8 mm)	RSLD-4 1"Ø X 18GA. (25Ø x 1.2 mm)
R5	10' (3)	RSLL-5 U 2 3/4" X 3/16" (U 70 X 4.8 mm)	RSLD-5 1"Ø X 18GA. (25Ø x 1.2 mm)
R6	10' (3)	RSLL-6 U 2 3/4" X 3/16" (U 70 X 4.8 mm)	RSLD-6 1"Ø X 18GA. (25Ø x 1.2 mm)
R7	10' (3)	RSLL-7 U 2 3/4" X 3/16" (U 70 X 4.8 mm)	RSLD-7 1"Ø X 18GA. (25Ø x 1.2 mm)
R8H	10' (3)	RSLL-8 U 2 3/4" X 1/4" (U 70 X 6.4 mm)	RSLD-8H 1 1/4"Ø X 16GA. (32Ø x 1.7 mm)
R9H	10' (3)	RSLL-9 U 2 3/4" X 1/4" (U 70 X 6.4 mm)	RSLD-9H 1 1/4"Ø X 16GA. (32Ø x 1.7 mm)
R10H	10' (3)	RSLL-10 U 2 3/4" X 1/4" (U 70 X 6.4 mm)	RSLD-10H 1 1/4"Ø X 16GA. (32Ø x 1.7 mm)

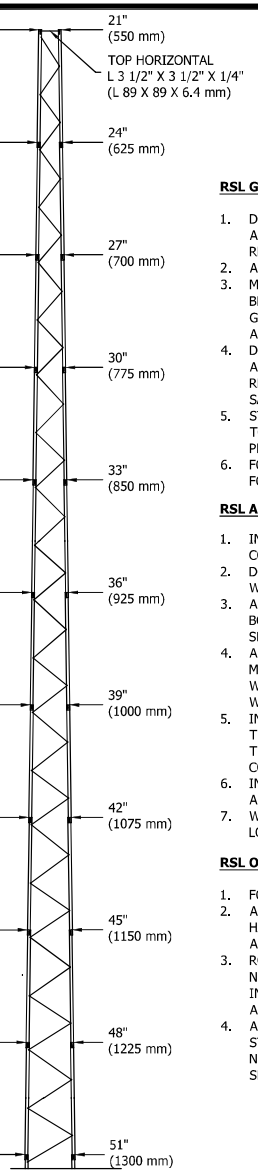

FACE WIDTH

RSL GENERAL NOTES

1. DIMENSIONS INDICATED FOR HEIGHTS, FACE WIDTHS AND MEMBER LENGTHS ARE NOMINAL AND MAY VARY WITH THE BASE AND TOP MOUNT OPTIONS SELECTED. ACTUAL DIMENSIONS FOR SPECIFIC CONFIGURATIONS ARE AVAILABLE UPON REQUEST.
2. ALL DIMENSIONS IN PARENTHESES ARE IN METERS, UNLESS OTHERWISE NOTED.
3. MATERIAL SPECIFICATIONS: LEGS, 65 KSI [450 MPa]; 1" [25 mm] DIA. BRACES, 30 KSI [210 MPa]; 1-1/4" [32 mm] DIA. BRACES, 50 KSI [350 MPa]; ANGLES, 50 KSI [350 MPa]; BASE PLATES, 50 KSI [350 MPa]; 3/8" [10 mm] DIA. BRACE BOLTS, GR5; 5/8" [16 mm] DIA. LEG SPLICE BOLTS, A325. ALL MATERIAL GALVANIZED AFTER FABRICATION IN ACCORDANCE WITH ANSI/TIA-222-G.
4. DESIGNS ASSUME MAINTENANCE AND INSPECTION WILL BE PERFORMED OVER THE LIFE OF THE STRUCTURE IN ACCORDANCE WITH ANSI/TIA-222-G. ALL TOWERS SHOULD BE THOROUGHLY INSPECTED BY QUALIFIED PERSONNEL AND RE-MARKED AS REQUIRED WITH APPROPRIATE DANGER AND ANTI-CLIMB LABELS AT LEAST TWICE A YEAR TO ENSURE SAFETY AND PROPER PERFORMANCE.
5. STANDARD RSL TOWERS ARE INTENDED TO BE CLIMBED BY SKILLED AND COMPETENT CLIMBERS ONLY. THE STANDARD RSL TOWER KITS CONFORM TO BOTH CLASS A AND CLASS B ANSI/TIA-222-G CLIMBING FACILITIES WHEN STEP BOLTS ARE PROVIDED WITH A SAFETY CLIMB DEVICE.
6. FOUNDATIONS MUST BE DESIGNED FOR THE CONDITIONS EXISTING AT A SITE. THE ADEQUACY OF STANDARD FOUNDATIONS MUST BE DETERMINED PRIOR TO INSTALLATION.

RSL ASSEMBLY NOTES

1. INSTALLATION AND DISMANTLING MUST BE PERFORMED BY QUALIFIED AND EXPERIENCED PERSONNEL AND BE IN CONFORMANCE WITH ANSI/TIA-222-G AND ANSI/TIA-1019-A.
2. DO NOT INSTALL OR DISMANTLE STRUCTURES WITHIN FALLING DISTANCE OF ELECTRICAL AND/OR TELEPHONE LINES WITHOUT TAKING SPECIAL PRECAUTIONS IN ACCORDANCE WITH THE APPROPRIATE UTILITY.
3. ALL MEMBERS ARE STAMPED WITH A PART NUMBER. ALL LEGS MUST BE INSTALLED WITH THE LEG PART NUMBER AT THE BOTTOM OF THE SECTION FOR PROPER FIT UP. LEG SPLICE HARDWARE IS INCLUDED IN THE SECTION KIT FOR THE UPPER SECTION AT A SPLICE. ALL BRACES FOR A GIVEN SECTION ARE OF THE SAME LENGTH.
4. ALL BOLTED CONNECTIONS AND ANCHOR BOLTS (WHEN UTILIZED) MUST BE TIGHTENED TO A SNUG TIGHT CONDITION AS A MINIMUM (MEMBERS IN FIRM CONTACT) AND MUST INCLUDE A NUT LOCKING DEVICE OR SELF-LOCKING NUT (INCLUDED WITH TOWER KIT). NO MINIMUM BOLT TENSION OR TORQUE VALUES ARE REQUIRED. NO FIELD WELDING IS REQUIRED. WHEN LOCK WASHERS ARE USED AS A NUT LOCKING DEVICE, REPLACE ANY DAMAGED WASHERS DUE TO OVER TIGHTENING.
5. INSTALLATION MUST BE GROUNDED IN ACCORDANCE WITH LOCAL AND NATIONAL CODES. ANSI/TIA-222-G REQUIRES THAT THE RESISTANCE TO GROUND MUST NOT EXCEED 10 OHMS. ADDITIONAL GROUNDING MAY BE REQUIRED IN ADDITION TO THE ROHN STANDARD GROUNDING KIT AVAILABLE AS AN OPTION FOR THE RSL TOWER DEPENDING ON THE SOIL CONDITIONS AT A SITE.
6. INSTALLATION MUST BE IN CONFORMANCE WITH LOCAL, STATE AND FEDERAL REQUIREMENTS FOR OBSTRUCTION MARKING AND LIGHTING.
7. WARNING PLATE PART NUMBER AWCS PROVIDED WITH AN RSL TOWER KIT MUST BE INSTALLED IN A HIGHLY VISIBLE LOCATION AT THE BASE OF THE TOWER.

RSL ORDERING INFORMATION

1. FOUNDATION BASES MUST BE ORDERED SEPARATELY.
2. ALL ACCESSORIES MUST BE ORDERED SEPARATELY INCLUDING STEP BOLT KITS, SAFETY CLIMB SYSTEMS, CLIMBING HARNESS WITH SLIDER, GROUNDING KITS, LIGHTNING RODS, TOP PLATE, TOP MAST, MOUNTING KITS, W/G BRACKETS, ANTI-CLIMB ASSEMBLIES, ETC.
3. ROHN STANDARD RSL TOWER KITS ARE SUPPLIED WITH LOCK WASHERS AS NUT LOCKING DEVICES. PAL NUTS (P), ANCO NUTS (A) AND TRI-LOC NUTS (T) ARE ALTERNATIVE NUT LOCKING DEVICES THAT MAY BE OBTAINED BY ADDING THE INDICATED SUFFIX TO THE STANDARD RSL TOWER KIT PART NUMBER. (NOTE: NUT LOCKING DEVICES ARE REQUIRED IN ACCORDANCE WITH ANSI/TIA-222-G.)
4. ALL THREE TOWER LEGS IN EACH SECTION HAVE PROVISION TO INSTALL STEP BOLTS AND A SAFETY CLIMB SYSTEM. WHEN STEP BOLTS ARE DESIRED, ONE STEP BOLT KIT MUST BE ORDERED FOR EACH SECTION OF THE TOWER. INCREASE THE NUMBER OF STEP BOLT KITS ACCORDINGLY WHEN STEP BOLTS ARE DESIRED ON MORE THAN ONE TOWER LEG OF A SECTION.

RSL TOWER KITS

HEIGHT	KIT NO.	SECTIONS	TOP HORZ BRACE
100' (30)	RSL100L10	R1-R10H	RSLH1A
90' (27)	RSL90L19	R1-R9H	RSLH1A
	RSL90L20	R2-R10H	RSLH2A
80' (24)	RSL80L18	R1-R8H	RSLH1A
	RSL80L29	R2-R9H	RSLH2A
	RSL80L30	R3-R10H	RSLH3A
70' (21)	RSL70L17	R1-R7	RSLH1A
	RSL70L28	R2-R8H	RSLH2A
	RSL70L39	R3-R9H	RSLH3A
	RSL70L40	R4-R10H	RSLH4A
60' (18)	RSL60L16	R1-R6	RSLH1A
	RSL60L49	R4-R9H	RSLH4A
	RSL60L50	R5-R10H	RSLH5A
50' (15)	RSL50L15	R1-R5	RSLH1A
	RSL50L59	R5-R9H	RSLH5A
	RSL50L60	R6-R10H	RSLH6A
40' (12)	RSL40L14	R1-R4	RSLH1A
	RSL40L70	R7-R10H	RSLH7A
30' (9)	RSL30L13	R1-R3	RSLH1A
	RSL30H80	R8H-R10H	RSLH8A
20' (6)	RSL20L12	R1-R2	RSLH1A
	RSL20H90	R9H-R10H	RSLH9A

FILE NO.

REVISIONS

REV.	DESCRIPTION	DWN	CHK	APP
2	UPDATE DRAWING TO NEW STANDARDS DATE: 09/15/12	ZAW	JDM	HA

ROHN PRODUCTS
PO BOX 5999
PEORIA, IL 61601-5999
TOLL FREE 800-727-ROHN

THIS DRAWING IS THE PROPERTY OF ROHN. IT IS NOT TO BE REPRODUCED, COPIED OR TRACED IN WHOLE OR IN PART WITHOUT OUR WRITTEN CONSENT.

RSL TOWER
ASSEMBLY DRAWING
TUBE BRACING

DWN: ZAW	CHK'D: JDM	DATE: 08/08/12
ENG'R: HA	SHEET #: 1 OF 1	
PRJ. ENG'R: OH	PRJ. MANG'R:	
DRAWING NO: RSLT-01-A1		REV: 2

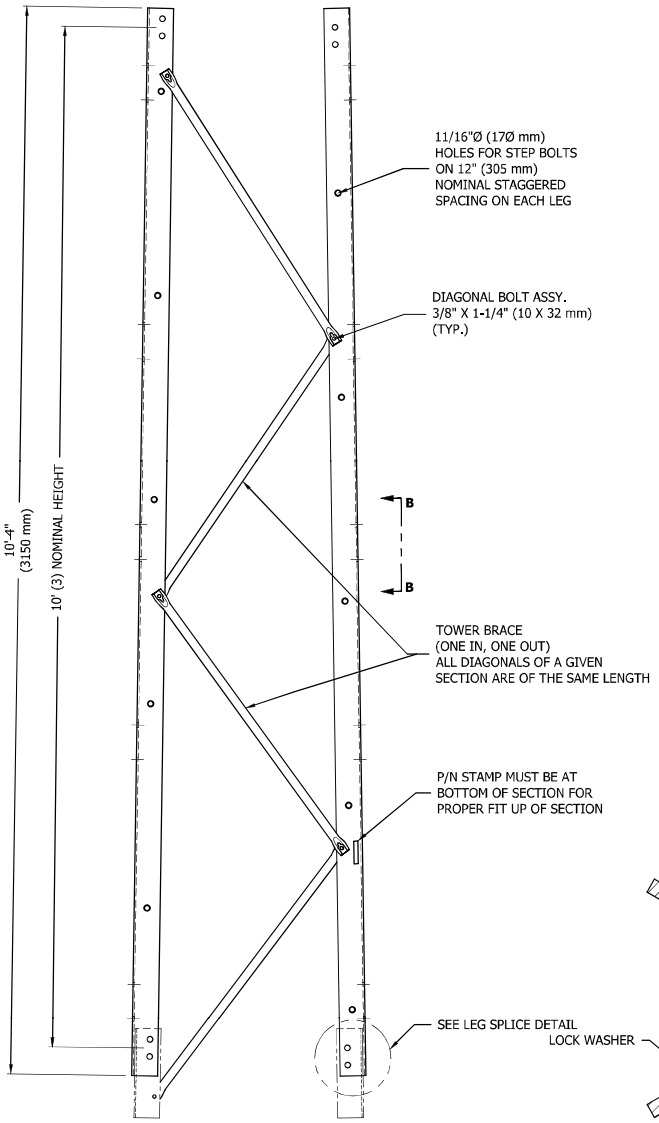

ELEVATION VIEW

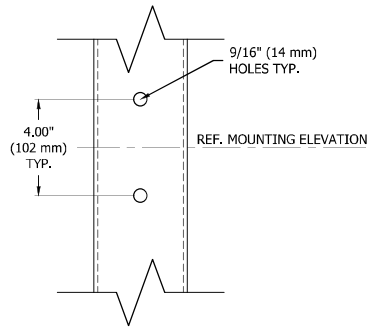

VIEW B-B
ACCESSORY MOUNTING HOLES IN EACH LEG LOCATED FOR NOMINAL MOUNTING ELEVATIONS 6" (150 mm) FROM EACH END AND THE 3' (910 mm), 5' (1520 mm) AND 7' (2130 mm) ELEVATIONS OF EACH SECTION.

SECTION	NOMINAL BRACE LENGTH
R1	38" (965 mm)
R2	40" (1016 mm)
R3	42" (1067 mm)
R4	44" (1118 mm)
R5	46" (1168 mm)
R6	48" (1219 mm)
R7	50" (1270 mm)
R8H	52" (1321mm)
R9H	55" (1397 mm)
R10H	57" (1448 mm)
REFER TO SHEET 2 FOR SECTION BILL OF MATERIALS	

NOTE:
1. NOMINAL METRIC EQUIVALENTS ARE GIVEN FOR REFERENCE ONLY AND SHALL NOT BE SUBSTITUTED FOR THE DESCRIBED SIZES UNLESS OTHERWISE APPROVED BY ROHN PRODUCTS.
2. ALL DIMENSIONS IN PARENTHESES ARE IN METERS, UNLESS OTHERWISE NOTED.

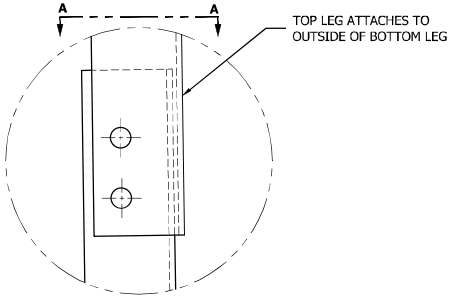

LEG SPLICE DETAIL

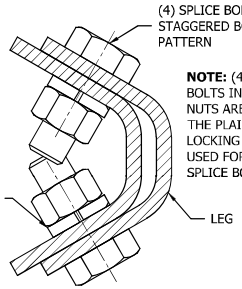

NOTE: (4) 5/8" X 1-3/4" (16 X 44 mm) BOLTS IN EACH LEG. WHEN LOCKING NUTS ARE SUBSTITUTED FOR LOCKWASHERS THE PLAIN WASHER PROVIDED WITH ROHN LOCKING NUT BOLT ASSEMBLIES MUST BE USED FOR 3/16" (5 mm) LEGS TO FULLY TIGHTEN SPLICE BOLTS.

VIEW A-A

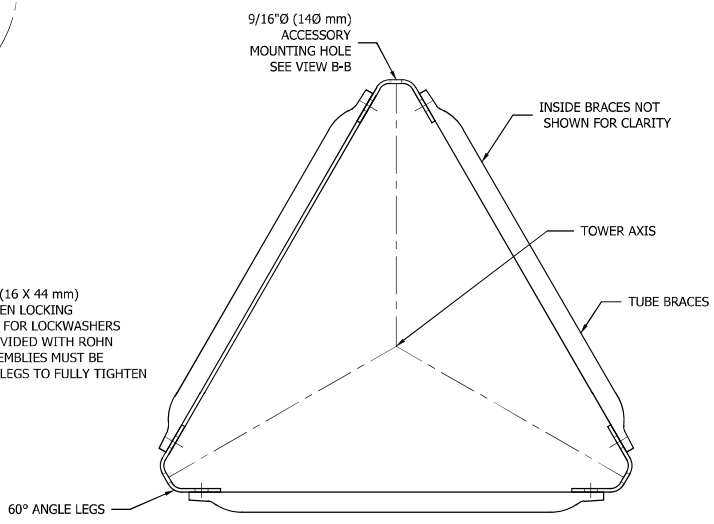

CROSS SECTION

FILE NO.
RSL-TOWER

REVISIONS

REV.	DESCRIPTION	DWN	CHK	APP
3	UPDATED DRAWING TO NEW STANDARDS DATE: 09/15/12	ZAW	JDM	HA

ROHN PRODUCTS
PO BOX 5999
PEORIA, IL 61601-5999
TOLL FREE 800-727-ROHN

THIS DRAWING IS THE PROPERTY OF ROHN. IT IS NOT TO BE REPRODUCED, COPIED OR TRACED IN WHOLE OR IN PART WITHOUT OUR WRITTEN CONSENT.

RSL TOWER
SECTION DETAILS
TUBE BRACING

DWN: CEJ	CHK'D: JDM	DATE: 05/21/12
ENG'R: HA	SHEET #: 1 OF 2	
PRJ. ENG'R: OH	PRJ. MANG'R:	
DRAWING NO: RSLT-01-A2		REV: 3

SECTION BILL OF MATERIALS

SECTION	PART NO.	QTY	DESCRIPTION
R1	RSLL-1	3	U 2.75"X.19"X10.33' HDG
	RSLD-1	12	BRACE R1 1.00"ODX18GAX3.15'
	210005GALW	15	BOLT ASSY 3/8 X 1-1/4 G5
	210030GALW	12	BOLT ASSY 5/8 X 1-3/4 A325
R2	RSLL-2	3	U 2.75"X.19"X10.33' HDG
	RSLD-2	12	BRACE R2 1.00"ODX18GAX3.30'
	210005GALW	15	BOLT ASSY 3/8 X 1-1/4 G5
	210030GALW	12	BOLT ASSY 5/8 X 1-3/4 A325
R3	RSLL-3	3	U 2.75"X.19"X10.33' HDG
	RSLD-3	12	BRACE R3 1.00"ODX18GAX3.46'
	210005GALW	15	BOLT ASSY 3/8 X 1-1/4 G5
	210030GALW	12	BOLT ASSY 5/8 X 1-3/4 A325
R4	RSLL-4	3	U 2.75"X.19"X10.33' HDG
	RSLD-4	12	BRACE R4 1.00"ODX18GAX3.62'
	210005GALW	15	BOLT ASSY 3/8 X 1-1/4 G5
	210030GALW	12	BOLT ASSY 5/8 X 1-3/4 A325
R5	RSLL-5	3	U 2.75"X.19"X10.33' HDG
	RSLD-5	12	BRACE R5 1.00"ODX18GAX3.80'
	210005GALW	15	BOLT ASSY 3/8 X 1-1/4 G5
	210030GALW	12	BOLT ASSY 5/8 X 1-3/4 A325

SECTION BILL OF MATERIALS

SECTION	PART NO.	QTY	DESCRIPTION
R6	RSLL-6	3	U 2.75"X.19"X10.33' HDG
	RSLD-6	12	BRACE R6 1.00"ODX18GAX3.98'
	210005GALW	15	BOLT ASSY 3/8 X 1-1/4 G5
	210030GALW	12	BOLT ASSY 5/8 X 1-3/4 A325
R7	RSLL-7	3	U 2.75"X.19"X10.33' HDG
	RSLD-7	12	BRACE R7 1.00"ODX18GAX4.17'
	210005GALW	15	BOLT ASSY 3/8 X 1-1/4 G5
	210030GALW	12	BOLT ASSY 5/8 X 1-3/4 A325
R8H	RSLL-8	3	U 2.75"X.25"X10.33' HDG
	RSLD-8H	12	BRACE R8 1.25"ODX16GAX4.36'
	210005GALW	15	BOLT ASSY 3/8 X 1-1/4 G5
	210030GALW	12	BOLT ASSY 5/8 X 1-3/4 A325
R9H	RSLL-9	3	U 2.75"X.25"X10.33' HDG
	RSLD-9H	12	BRACE R9 1.25"ODX16GAX4.55'
	210005GALW	15	BOLT ASSY 3/8 X 1-1/4 G5
	210030GALW	12	BOLT ASSY 5/8 X 1-3/4 A325
R10H	RSLL-10	3	U 2.75"X.25"X10.33' HDG
	RSLD-10H	12	BRACE R10 1.25"ODX16GAX4.74'
	210005GALW	15	BOLT ASSY 3/8 X 1-1/4 G5
	210030GALW	12	BOLT ASSY 5/8 X 1-3/4 A325

NOTE:
1. **BOLT ASSY'S IN B.O.M. ABOVE CONSIST OF BOLT, HEAVY HEX NUTS, & SPRING LOCK WASHER.**
2. **ADD SUFFIX A, P, OR T TO SECTION PART NUMBER FOR ANCO, PAL OR TRILOC NUT LOCKING DEVICE. EXAMPLE: R1-A FOR ANCO**
3. **LEG & BRACE PART NUMBERS ARE STAMPED AS 1,2,3,.....10. THIS COINCIDES WIH LEG PART NUMBERS RSLL-1,RSLL-2,.....RSLL-10 AND BRACE PART NUMBER RSLD-1, RSLD-2,___RSLD-10 NOTED IN BILL OF MATERIALS ABOVE .**

FILE NO.
RSL-TOWER

REVISIONS

REV.	DESCRIPTION	DWN	CHK	APP
3	UPDATED DRAWING TO NEW STANDARDS DATE: 09/15/12	ZAW	JDM	HA

ROHN PRODUCTS
PO BOX 5999
PEORIA, IL 61601-5999
TOLL FREE 800-727-ROHN

THIS DRAWING IS THE PROPERTY OF ROHN. IT IS NOT TO BE REPRODUCED, COPIED OR TRACED IN WHOLE OR IN PART WITHOUT OUR WRITTEN CONSENT.

RSL TOWER
SECTION DETAILS
TUBE BRACING

DWN: CEJ	CHK'D: JDM	DATE: 05/21/12
ENG'R: HA	SHEET #: 2 OF 2	
PRJ. ENG'R: OH	PRJ. MANG'R:	
DRAWING NO: RSLT-01-A2	REV: 3	

NOTE:

1. BOLT ASSY'S IN B.O.M. ABOVE CONSIST OF BOLT & TRI-LOC NUT.
2. ADD SUFFIX A, P, OR T TO SECTION PART NUMBER FOR ANCO, PAL OR TRILOC NUT LOCKING DEVICE. EXAMPLE: RSLH1A-A FOR ANCO
3. NOMINAL METRIC EQUIVALENTS ARE GIVEN FOR REFERENCE ONLY AND SHALL NOT BE SUBSTITUTED FOR THE DESCRIBED SIZES UNLESS OTHERWISE APPROVED BY ROHN PRODUCTS.
4. ALL DIMENSIONS IN PARENTHESES ARE IN METERS, UNLESS OTHERWISE NOTED.

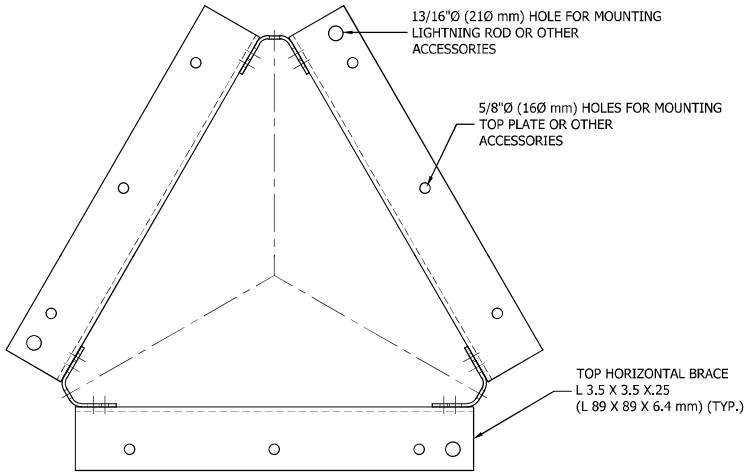

TOP HORIZONTAL BRACE KIT BILL OF MATERIAL

ITEM	P/N	QTY	DESCRIPTION
RSLH1A (FOR NO. 1 RSL TOWER SECTION)	RSLH1	3	BRACE H R1 L3.5X.25X1.83'
	210030GA-TLN	6	BOLT ASSY 5/8 X 1-3/4" A325
RSLH2A (FOR NO. 2 RSL TOWER SECTION)	RSLH2	3	BRACE H R2 L3.5X.25X2.08'
	210030GA-TLN	6	BOLT ASSY 5/8 X 1-3/4" A325
RSLH3A (FOR NO. 3 RSL TOWER SECTION)	RSLH3	3	BRACE H R3 L3.5X.25X2.32'
	210030GA-TLN	6	BOLT ASSY 5/8 X 1-3/4" A325
RSLH4A (FOR NO. 4 RSL TOWER SECTION)	RSLH4	3	BRACE H R4 L3.5X.25X2.57'
	210030GA-TLN	6	BOLT ASSY 5/8 X 1-3/4" A325
RSLH5A (FOR NO. 5 RSL TOWER SECTION)	RSLH5	3	BRACE H R5 L3.5X.25X2.81'
	210030GA-TLN	6	BOLT ASSY 5/8 X 1-3/4" A325
RSLH6A (FOR NO. 6 RSL TOWER SECTION)	RSLH6	3	BRACE H R6 L3.5X.25X3.05'
	210030GA-TLN	6	BOLT ASSY 5/8 X 1-3/4" A325
RSLH7A (FOR NO. 7 RSL TOWER SECTION)	RSLH7	3	BRACE H R7 L3.5X.25X3.30'
	210030GA-TLN	6	BOLT ASSY 5/8 X 1-3/4" A325
RSLH8A (FOR NO. 8 RSL TOWER SECTION)	RSLH8	3	BRACE H R8 L3.5X.25X3.54'
	210030GA-TLN	6	BOLT ASSY 5/8 X 1-3/4" A325
RSLH9A (FOR NO. 9 RSL TOWER SECTION)	RSLH9	3	BRACE H R9 L3.5X.25X3.77'
	210030GA-TLN	6	BOLT ASSY 5/8 X 1-3/4" A325

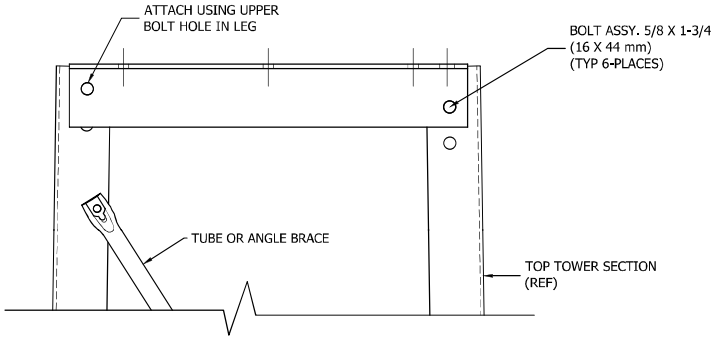

(FOR P/N'S: RSLH1A - RSLH7A)

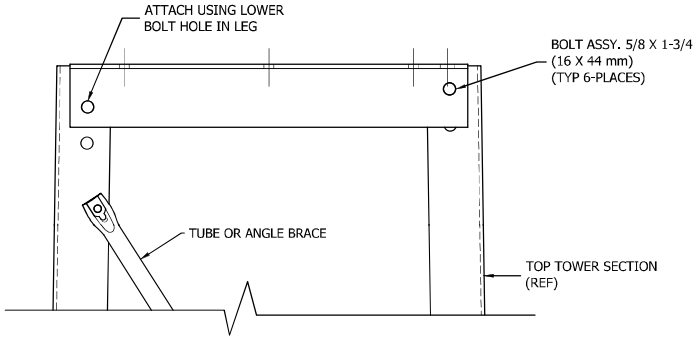

(FOR P/N'S: RSLH8A - RSLH9A)

FILE NO.

REVISIONS

REV.	DESCRIPTION	DWN	CHK	APP
2	REVISED 9/16" HOLES TO 5/8" HOLES DATE: 11/19/12	ZAW	JDM	HA

ROHN PRODUCTS
PO BOX 5999
PEORIA, IL 61601-5999
TOLL FREE 800-727-ROHN

THIS DRAWING IS THE PROPERTY OF ROHN. IT IS NOT TO BE REPRODUCED, COPIED OR TRACED IN WHOLE OR IN PART WITHOUT OUR WRITTEN CONSENT.

RSL TOWER
TOP HORIZONTAL BRACE KITS

DWN: ZAW	CHK'D: JDM	DATE: 08/07/12
ENG'R: HA	SHEET #: 1 OF 1	
PRJ. ENG'R: OH	PRJ. MANG'R:	
DRAWING NO: RSLHRZ		REV: 2

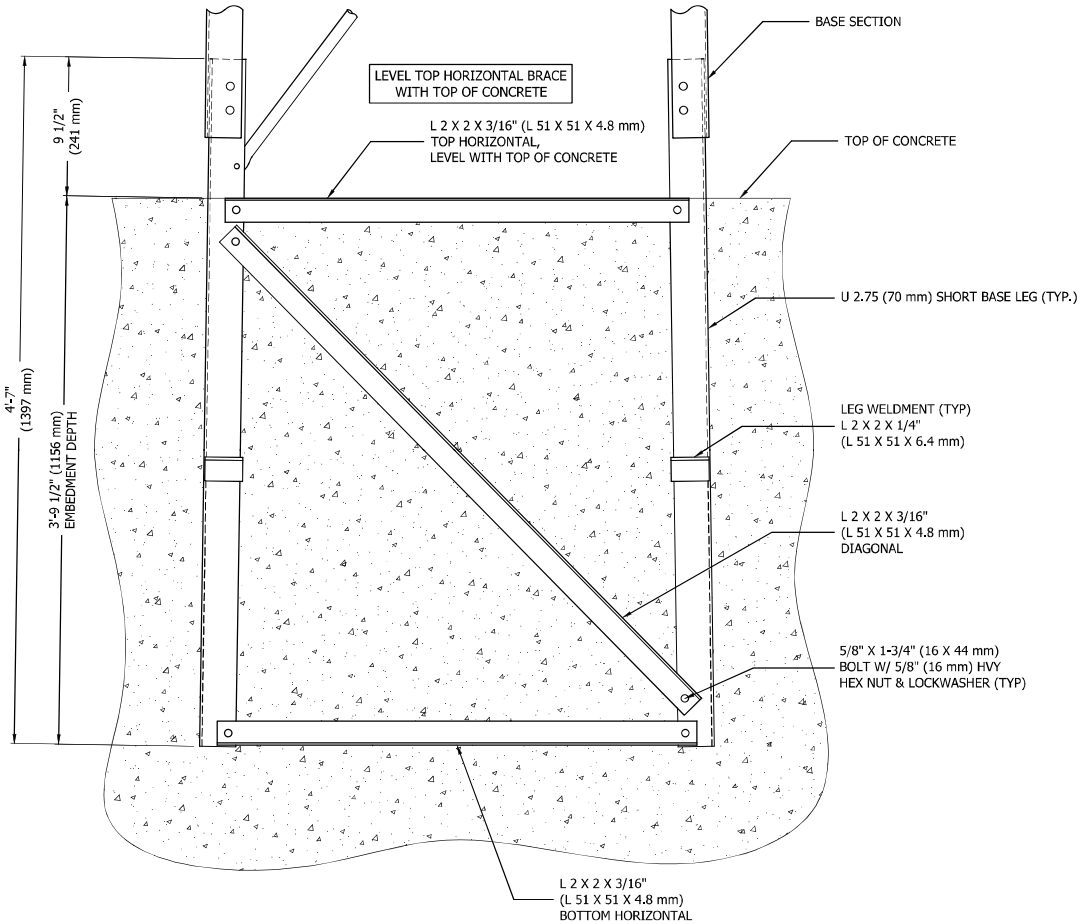

TOWER SHORT BASE FOUNDATION KIT DETAILS

NOTES:

1. MAT REINFORCING BARS NOT SHOWN FOR CLARITY.
2. BOLT ASSY'S IN B.O.M. CONSIST OF BOLT, SPRING LOCK WASHER, & NUT.
3. NOMINAL METRIC EQUIVALENTS ARE GIVEN FOR REFERENCE ONLY AND SHALL NOT BE SUBSTITUTED FOR THE DESCRIBED SIZES UNLESS OTHERWISE APPROVED BY ROHN PRODUCTS.
4. ALL DIMENSIONS IN PARENTHESES ARE IN METERS, UNLESS OTHERWISE NOTED.

KIT NO.	PART NO.	QTY.	DESCRIPTION
RSB02 (FOR NO. 2 RSL TOWER SECTION)	RSLF-BW	3	LEG BASE U2.74"X.19"X4.58' HDG
	BK2-TOP	3	TOP HORZ L2X2X.19X2.34' HDG
	BK2-MID	3	DIAG L2X2X.19X3.92' HDG
	BK2-BOT	3	BOT HORZ L2X2X.19X2.44' HDG
	210030GALW	18	BOLT ASSY 5/8 X 1-3/4 HSB A325
RSB03 (FOR NO. 3 RSL TOWER SECTION)	RSLF-BW	3	LEG BASE U2.74"X.19"X4.58' HDG
	BK3-TOP	3	TOP HORZ L2X2X.19X2.58' HDG
	BK3-MID	3	DIAG L2X2X.19X4.07' HDG
	BK3-BOT	3	BOT HORZ L2X2X.19X2.69' HDG
	210030GALW	18	BOLT ASSY 5/8 X 1-3/4 HSB A325
RSB04 (FOR NO. 4 RSL TOWER SECTION)	RSLF-BW	3	LEG BASE U2.74"X.19"X4.58' HDG
	BK4-TOP	3	TOP HORZ L2X2X.19X2.82' HDG
	BK4-MID	3	DIAG L2X2X.19X4.23' HDG
	BK4-BOT	3	BOT HORZ L2X2X.19X2.93' HDG
	210030GALW	18	BOLT ASSY 5/8 X 1-3/4 HSB A325
RSB05 (FOR NO. 5 RSL TOWER SECTION)	RSLF-BW	3	LEG BASE U2.74"X.19"X4.58' HDG
	BK5-TOP	3	TOP HORZ L2X2X.19X3.07' HDG
	BK5-MID	3	DIAG L2X2X.19X4.40' HDG
	BK5-BOT	3	BOT HORZ L2X2X.19X3.18' HDG
	210030GALW	18	BOLT ASSY 5/8 X 1-3/4 HSB A325
RSB06 (FOR NO. 6 RSL TOWER SECTION)	RSLF-BW	3	LEG BASE U2.74"X.19"X4.58' HDG
	BK6-TOP	3	TOP HORZ L2X2X.19X3.31' HDG
	BK6-MID	3	DIAG L2X2X.19X4.57' HDG
	BK6-BOT	3	BOT HORZ L2X2X.19X3.42' HDG
	210030GALW	18	BOLT ASSY 5/8 X 1-3/4 HSB A325
RSB07 (FOR NO. 7 RSL TOWER SECTION)	RSLF-AW	3	LEG BASE U2.77"X.25"X4.58' HDG
	BK7-TOP	3	TOP HORZ L2X2X.19X3.56' HDG
	BK7-MID	3	DIAG L2X2X.19X4.75' HDG
	BK7-BOT	3	BOT HORZ L2X2X.19X3.66' HDG
	210030GALW	18	BOLT ASSY 5/8 X 1-3/4 HSB A325
RSB08 (FOR NO. 8 RSL TOWER SECTION)	RSLF-AW	3	LEG BASE U2.77"X.25"X4.58' HDG
	BK8-TOP	3	TOP HORZ L2X2X.19X3.78' HDG
	BK8-MID	3	DIAG L2X2X.19X4.92' HDG
	BK8-BOT	3	BOT HORZ L2X2X.19X3.89' HDG
	210030GALW	18	BOLT ASSY 5/8 X 1-3/4 HSB A325
RSB09 (FOR NO. 9 RSL TOWER SECTION)	RSLF-AW	3	LEG BASE U2.77"X.25"X4.58' HDG
	BK9-TOP	3	TOP HORZ L2X2X.19X4.01' HDG
	BK9-MID	3	DIAG L2X2X.19X5.10' HDG
	BK9-BOT	3	BOT HORZ L2X2X.19X4.12' HDG
	210030GALW	18	BOLT ASSY 5/8 X 1-3/4 HSB A325
RSB10 (FOR NO. 10 RSL TOWER SECTION)	RSLF-AW	3	LEG BASE U2.77"X.25"X4.58' HDG
	BK10-TOP	3	TOP HORZ L2X2X.19X4.23' HDG
	BK10-MID	3	DIAG L2X2X.19X5.28' HDG
	BK10-BOT	3	BOT HORZ L2X2X.19X4.34' HDG
	210030GALW	18	BOLT ASSY 5/8 X 1-3/4 HSB A325

FILE NO.

REVISIONS

REV.	DESCRIPTION	DWN	CHK	APP
4	ADDED BASE SECTION DATE: 11/19/12	ZAW	JDM	HA

ROHN PRODUCTS
PO BOX 5999
PEORIA, IL 61601-5999
TOLL FREE 800-727-ROHN

THIS DRAWING IS THE PROPERTY OF ROHN. IT IS NOT TO BE REPRODUCED, COPIED OR TRACED IN WHOLE OR IN PART WITHOUT OUR WRITTEN CONSENT.

RSL TOWER
SHORT BASE SECTION KITS

DWN: CEJ	CHK'D: JDM	DATE: 05/21/2012
ENG'R: HA	SHEET #: 1 OF 1	
PRJ. ENG'R: OH	PRJ. MANG'R:	
DRAWING NO: RSLSBK		REV: 4

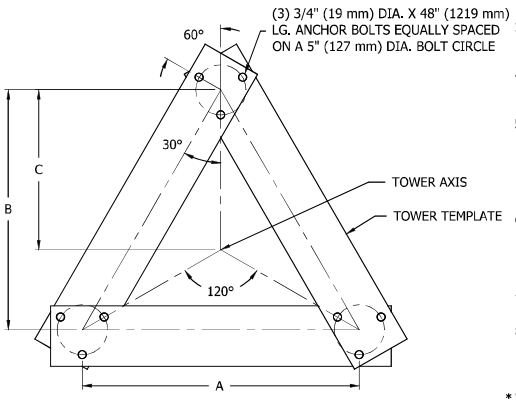

ANCHOR BOLT MUST BE POSITIONED TO TOWER AXIS AS SHOWN

NOTES

1. ALL ANCHOR BOLTS MUST MEET OR EXCEED REQUIREMENTS OF A.S.T.M. F1554-S2, S5 GRADE 105.
2. SPECIAL CARE MUST BE TAKEN WHEN LIFTING ANCHOR BOLT CLUSTER, IN ORDER TO PREVENT ANCHOR BOLT TEMPLATE DISTORTION.
3. ANCHOR BOLT ASSEMBLY MUST BE ADEQUATELY SUPPORTED AND RESTRAINED TO PREVENT MOVEMENT OF THE CLUSTER DURING CONCRETE INSTALLATION.
4. IT IS THE RESPONSIBILITY OF THE FOUNDATION CONTRACTOR TO VERIFY THAT THE CORRECT ANCHOR BOLT TEMPLATE AND FOUNDATION ARE BEING USED.
5. IT IS THE RESPONSIBILITY OF THE FOUNDATION DESIGN ENGINEER TO INSURE THAT THE ANCHORAGES PROVIDED ARE COMPATIBLE WITH THE PROPOSED FOUNDATION DESIGN AND THAT THE CAPACITIES OF THE ANCHORAGES ARE NOT LIMITED BY THE STRENGTH OF THE FOUNDATION.
6. AFTER ANCHOR BOLTS ARE INSTALLED AND CONCRETE HAS TAKEN ITS INITIAL SET, ANCHOR BOLTS MUST NOT BE MOVED, BENT OR REALIGNED IN ANY MANNER. A NUT LOCKING DEVICE MUST BE INSTALLED ON ALL ANCHOR BOLTS.
7. ALL DIMENSIONS IN PARENTHESES ARE IN METERS, UNLESS OTHERWISE NOTED.
8. NOMINAL METRIC EQUIVALENTS ARE GIVEN FOR REFERENCE ONLY AND SHALL NOT BE SUBSTITUTED FOR THE DESCRIBED SIZE UNLESS OTHERWISE APPROVED BY ROHN PRODUCTS.

*9. ANCHOR BOLT NUTS SHALL BE ROTATED 1/3 TURN FROM SNUG TIGHT CONDITION WITH BOTTOM LEVELING NUT HELD IN PLACE.

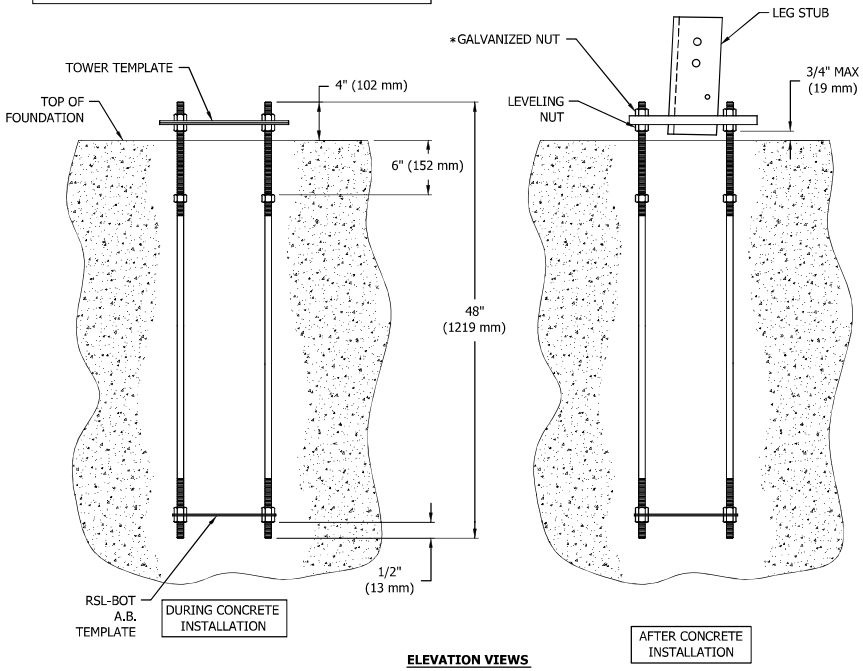

ELEVATION VIEWS

KIT NO.	PART NO.	QTY.	A	B	C	DESCRIPTION
RAL02 (FOR NO. 2 RSL TOWER SECTION)	RSL2-TEMK	1	2'-3 9/16" (0.700)	1'-11 7/8" (0.606)	1'-3 15/16" (0.405)	TOWER TEMPLATE KIT R2
	RSL2-6W	3				LEG STUB R2-6 HDG
	RSL-BOT	3				TEMPLATE .25X7.00"OD BLK
	260093G	9				ANCHOR BOLT 3/4X48 F1554-S5
RAL03 (FOR NO. 3 RSL TOWER SECTION)	RSL3-TEMK	1	2'-6 1/2" (0.775)	2'-2 3/8" (0.670)	1'-5 5/8" (0.448)	TOWER TEMPLATE KIT R3
	RSL2-6W	3				LEG STUB R2-6 HDG
	RSL-BOT	3				TEMPLATE .25X7.00"OD BLK
	260093G	9				ANCHOR BOLT 3/4X48 F1554-S5
RAL04 (FOR NO. 4 RSL TOWER SECTION)	RSL4-TEMK	1	2'-9 3/8" (0.848)	2'-4 15/16" (0.735)	1'-7 5/16" (0.491)	TOWER TEMPLATE KIT R4
	RSL2-6W	3				LEG STUB R2-6 HDG
	RSL-BOT	3				TEMPLATE .25X7.00"OD BLK
	260093G	9				ANCHOR BOLT 3/4X48 F1554-S5
RAL05 (FOR NO. 5 RSL TOWER SECTION)	RSL5-TEMK	1	3'-0 5/16" (0.922)	2'-7 7/16" (0.799)	1'-9" (0.533)	TOWER TEMPLATE KIT R5
	RSL2-6W	3				LEG STUB R2-6 HDG
	RSL-BOT	3				TEMPLATE .25X7.00"OD BLK
	260093G	9				ANCHOR BOLT 3/4X48 F1554-S5
RAL06 (FOR NO. 6 RSL TOWER SECTION)	RSL6-TEMK	1	3'-3 1/4" (0.997)	2'-10" (0.864)	1'-10 11/16" (0.576)	TOWER TEMPLATE KIT R6
	RSL2-6W	3				LEG STUB R2-6 HDG
	RSL-BOT	3				TEMPLATE .25X7.00"OD BLK
	260093G	9				ANCHOR BOLT 3/4X48 F1554-S5
RAL07 (FOR NO. 7 RSL TOWER SECTION)	RSL7-TEMK	1	3'-6" (1.067)	3'-0 3/8" (0.924)	2'-0 1/4" (0.616)	TOWER TEMPLATE KIT R7
	RSL7-10W	3				LEG STUB R7-10 HDG
	RSL-BOT	3				TEMPLATE .25X7.00"OD BLK
	260093G	9				ANCHOR BOLT 3/4X48 F1554-S5
RAL08 (FOR NO. 8 RSL TOWER SECTION)	RSL8-TEMK	1	3'-8 11/16" (1.135)	3'-2 11/16" (0.983)	2'-1 13/16" (0.656)	TOWER TEMPLATE KIT R8H
	RSL7-10W	3				LEG STUB R7-10 HDG
	RSL-BOT	3				TEMPLATE .25X7.00"OD BLK
	260093G	9				ANCHOR BOLT 3/4X48 F1554-S5
RAL09 (FOR NO. 9 RSL TOWER SECTION)	RSL9-TEMK	1	3'-11 3/8" (1.203)	3'-5 1/16" (1.043)	2'-3 3/8" (0.695)	TOWER TEMPLATE KIT R9H
	RSL7-10W	3				LEG STUB R7-10 HDG
	RSL-BOT	3				TEMPLATE .25X7.00"OD BLK
	260093G	9				ANCHOR BOLT 3/4X48 F1554-S5
RAL10 (FOR NO. 10 RSL TOWER SECTION)	RSL10-TEMK	1	4'-2 1/8" (1.273)	3'-7 3/8" (1.102)	2'-4 15/16" (0.735)	TOWER TEMPLATE KIT R10H
	RSL7-10W	3				LEG STUB R7-10 HDG
	RSL-BOT	3				TEMPLATE .25X7.00"OD BLK
	260093G	9				ANCHOR BOLT 3/4X48 F1554-S5

FILE NO.
RSL-TOWER

REVISIONS

REV.	DESCRIPTION	DWN	CHK	APP
4	ADDED ANCHOR BOLT POSITIONING NOTE DATE: 09/18/14	CEJ	JDM	HA

ROHN PRODUCTS
PO BOX 5999
PEORIA, IL 61601-5999
TOLL FREE 800-727-ROHN

THIS DRAWING IS THE PROPERTY OF ROHN. IT IS NOT TO BE REPRODUCED, COPIED OR TRACED IN WHOLE OR IN PART WITHOUT OUR WRITTEN CONSENT.

RSL TOWER
LEG STUBS & ANCHOR KITS

DWN: ZAW	CHK'D: JDM	DATE: 06/14/2012
ENG'R: DWG	SHEET #: 1 OF 1	
PRJ. ENG'R: OH	PRJ. MANG'R:	
DRAWING NO: RSLABL		REV: 4

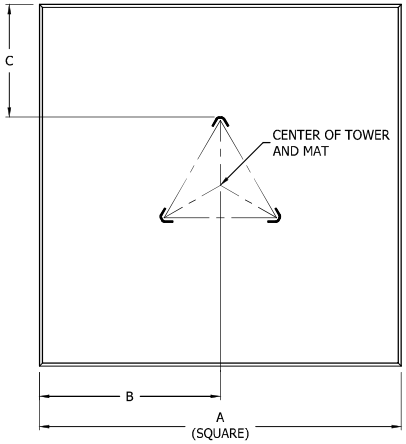

PLAN VIEW

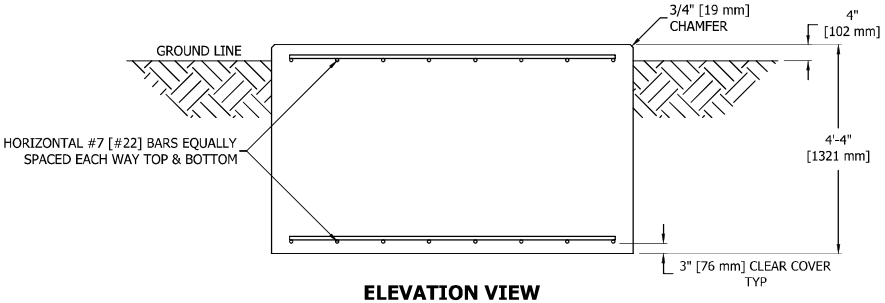

ELEVATION VIEW

RSL TOWER STANDARD MAT FOUNDATIONS

BASE SECTION REFERENCE	NOMINAL FACE WIDTH	FOUNDATION DIMENSIONS			CONCRETE	TOTAL #7 [#22] BARS
		A	B	C		
2	2'-3" [0.70 m]	7'-6" [2.29 m]	3'-9" [1.14 m]	2'-4" [0.71 m]	9.0 yd³ [6.9 m³]	32
3	2'-6" [0.78 m]	7'-9" [2.36 m]	3'-10 1/2" [1.18 m]	2'-4" [0.71 m]	9.6 yd³ [7.3 m³]	40
4	2'-9" [0.85 m]	8'-0" [2.44 m]	4'-0" [1.22 m]	2'-4" [0.71 m]	10.3 yd³ [7.9 m³]	40
5	3'-0" [0.93 m]	8'-3" [2.51 m]	4'-1 1/2" [1.26 m]	2'-4" [0.71 m]	10.9 yd³ [8.3 m³]	40
6	3'-3" [1.00 m]	8'-6" [2.59 m]	4'-3" [1.30 m]	2'-3" [0.69 m]	11.6 yd³ [8.9 m³]	40
7	3'-6" [1.08 m]	8'-6" [2.59 m]	4'-3" [1.30 m]	2'-2" [0.66 m]	11.6 yd³ [8.9 m³]	40
8	3'-9" [1.15 m]	9'-6" [2.90 m]	4'-9" [1.45 m]	2'-6" [0.76 m]	14.5 yd³ [11.1 m³]	40
9	4'-0" [1.23 m]	9'-9" [2.97 m]	4'-10 1/2" [1.49 m]	2'-6" [0.76 m]	15.3 yd³ [11.7 m³]	48
10	4'-3" [1.30 m]	10'-0" [3.05 m]	5'-0" [1.52 m]	2'-6" [0.76 m]	16.0 yd³ [12.2 m³]	48

NOTE: SEE DRAWING NO. B090548 FOR STANDARD FOUNDATION NOTES.

FILE NO.
RSL TOWER

REVISIONS

REV.	DESCRIPTION	DWN	CHK	APP
3	ADDED 4'-4" DATE: 06/04/2015	JHY	JDM	HA

ROHN® PRODUCTS, LLC
PO BOX 5999
PEORIA, IL 61601-5999
TOLL FREE 800-727-ROHN

THIS DRAWING IS THE PROPERTY OF ROHN. IT IS NOT TO BE REPRODUCED, COPIED OR TRACED IN WHOLE OR IN PART WITHOUT OUR WRITTEN CONSENT.

RSL TOWER
STANDARD MAT FOUNDATION DETAILS

DWN: ZAW	CHK'D: SSM	DATE: 7/11/12
ENG'R: HA	SHEET #: 1 OF 1	
PRJ. ENG'R: OH	PRJ. MANG'R:	
DRAWING NO: RSL-01-F1	REV: 3	

STANDARD FOUNDATION NOTES
ANSI/TIA-222-G

1. STANDARD FOUNDATION DESIGNS ARE IN ACCORDANCE WITH ANSI/TIA-222-G, "STRUCTURAL STANDARDS FOR STEEL ANTENNA TOWERS AND ANTENNA SUPPORTING STRUCTURES", SECTION 9 AND ANNEX F FOR THE FOLLOWING PRESUMPTIVE CLAY SOIL PARAMETERS:

N (blows/ft) [blows/m]	Φ (deg)	Y (lb/ft3) [kN/m3]	C (psf) [kPa]	Ultimate Bearing (psf) [kPa]		Ultimate Skin Friction (psf) [kPa]	k (pci) [kN/m3]	ε_{50}
				Shallow Fnds.	Deep Fnds.			
8 [26]	0	110 [17]	1000 [48]	5000 [240]	9000 [431]	500 [24]	150 [41,000]	0.01

2. THE PURCHASER MUST VERIFY THAT ACTUAL SITE SOIL PARAMETERS MEET OR EXCEED ANSI/TIA-222-G PRESUMPTIVE CLAY SOIL DESIGN PARAMETERS AND THAT THE PENETRATION AND/OR ZONE OF SEASONAL MOISTURE VARIATION AT THE SITE. FOUNDATION DESIGN MODIFICATIONS MAY BE REQUIRED IN THE EVENT PRESUMPTIVE CLAY SOIL PARAMETERS ARE NOT APPLICABLE FOR THE ACTUAL SUBSURFACE CONDITIONS ENCOUNTERED.
3. A SITE-SPECIFIC INVESTIGATION IS REQUIRED FOR CLASS III STRUCTURES IN ACCORDANCE WITH ANSI/TIA-222-G.
4. FOUNDATION DESIGNS ASSUME FIELD INSPECTIONS WILL BE PERFORMED BY THE PURCHASER'S REPRESENTATIVE TO VERIFY THAT CONSTRUCTION MATERIALS, INSTALLATION METHODS AND ASSUMED DESIGN PARAMETERS ARE ACCEPTABLE BASED ON THE CONDITIONS EXISTING AT THE SITE.
5. WORK SHALL BE IN ACCORDANCE WITH LOCAL CODES, SAFETY REGULATIONS AND UNLESS OTHERWISE NOTED, THE LATEST REVISION OF ACI 318, "BUILDING CODE REQUIREMENTS FOR REINFORCED CONCRETE". PROCEDURES FOR THE PROTECTION OF EXCAVATIONS, EXISTING CONSTRUCTION AND UTILITIES SHALL BE ESTABLISHED PRIOR TO FOUNDATION INSTALLATION.
6. CONCRETE MATERIALS SHALL CONFORM TO THE APPROPRIATE STATE REQUIREMENTS FOR EXPOSED STRUCTURAL CONCRETE.
7. PROPORTIONS OF CONCRETE MATERIALS SHALL BE SUITABLE FOR THE INSTALLATION METHOD UTILIZED AND SHALL RESULT IN DURABLE CONCRETE FOR RESISTANCE TO LOCAL ANTICIPATED AGGRESSIVE ACTIONS. THE DURABILITY REQUIREMENT OF ACI 318 CHAPTER 4 SHALL BE SATISFIED BASED ON THE CONDITIONS EXPECTED AT THE SITE. AS A MINIMUM, CONCRETE SHALL DEVELOP A MINIMUM COMPRESSIVE STRENGTH OF 4500 PSI (31.0 MPa) IN 28 DAYS.
8. MAXIMUM SIZE OF AGGREGATE SHALL NOT EXCEED SIZE SUITABLE FOR INSTALLATION METHOD UTILIZED OR 1/3 CLEAR DISTANCE BEHIND OR BETWEEN REINFORCING. MAXIMUM SIZE MAY BE INCREASED TO 2/3 CLEAR DISTANCE PROVIDED WORKABILITY AND METHODS OF CONSOLIDATION SUCH AS VIBRATING WILL PREVENT HONEYCOMBS OR VOIDS.
9. REINFORCEMENT SHALL BE DEFORMED AND CONFORM TO THE REQUIREMENTS OF ASTM A615 GRADE 60 UNLESS OTHERWISE NOTED. SPLICES IN REINFORCEMENT SHALL NOT BE ALLOWED UNLESS OTHERWISE INDICATED.
10. REINFORCING CAGES SHALL BE BRACED TO RETAIN PROPER DIMENSIONS DURING HANDLING, THROUGHOUT PLACEMENT OF CONCRETE AND DURING EXTRACTION OF TEMPORARY CASING.
11. WELDING IS PROHIBITED ON REINFORCING STEEL AND EMBEDMENTS.
12. MINIMUM CONCRETE COVER FOR REINFORCEMENT SHALL BE 3 INCHES (76 mm) UNLESS OTHERWISE NOTED. APPROVED SPACERS SHALL BE USED TO INSURE A 3 INCH (76 mm) MINIMUM COVER ON REINFORCEMENT. CONCRETE COVER FROM TOP OF FOUNDATION TO ENDS OF VERTICAL REINFORCEMENT SHALL NOT EXCEED 3 INCHES (76 mm) NOR BE LESS THAN 2 INCHES (51 mm).
13. SPACERS SHALL BE ATTACHED INTERMITTENTLY THROUGHOUT THE ENTIRE LENGTH OF VERTICAL REINFORCING CAGES TO INSURE CONCENTRIC PLACEMENT OF CAGES IN EXCAVATIONS.
14. FOUNDATION DESIGNS ASSUME STRUCTURAL BACKFILL TO BE COMPACTED IN 8 INCH (200 mm) MAXIMUM LAYERS TO 95% OF MAXIMUM DRY DENSITY AT OPTIMUM MOISTURE CONTENT IN ACCORDANCE WITH ASTM D698. ADDITIONALLY, STRUCTURAL BACKFILL MUST HAVE A MINIMUM COMPACTED UNIT WEIGHT OF 100 POUNDS PER CUBIC FOOT (16 kN/m3).
15. FOUNDATION DESIGNS ASSUME LEVEL GRADE AT THE SITE.
16. FOUNDATION INSTALLATION SHALL BE SUPERVISED BY PERSONNEL KNOWLEDGEABLE AND EXPERIENCED WITH THE PROPOSED FOUNDATION TYPE. CONSTRUCTION SHALL BE IN ACCORDANCE WITH GENERALLY ACCEPTED INSTALLATION PRACTICES.
17. FOR FOUNDATION AND ANCHOR TOLERANCES SEE DRAWING A810214.
18. LOOSE MATERIAL SHALL BE REMOVED FROM BOTTOM OF EXCAVATION PRIOR TO CONCRETE PLACEMENT. SIDES OF EXCAVATION SHALL BE ROUGH AND FREE OF LOOSE CUTTINGS.
19. CONCRETE SHALL BE PLACED IN A MANNER THAT WILL PREVENT SEGREGATION OF CONCRETE MATERIALS, INFILTRATION OF WATER OR SOIL AND OTHER OCCURRENCES WHICH MAY DECREASE THE STRENGTH OR DURABILITY OF THE FOUNDATION.
20. FREE FALL CONCRETE MAY BE USED PROVIDED FALL IS VERTICAL DOWN WITHOUT HITTING SIDES OF EXCAVATION, FORMWORK, REINFORCING BARS, FORM TIES, CAGE BRACING OR OTHER OBSTRUCTIONS. UNDER NO CIRCUMSTANCES SHALL CONCRETE FALL THROUGH WATER.
21. CONCRETE SHALL BE PLACED AGAINST UNDISTURBED SOIL EXCEPT FOR PIERS OR PIER AND PAD FOUNDATIONS. FORMS FOR PIERS SHALL BE REMOVED PRIOR TO PLACING STRUCTURAL BACKFILL.
22. CONSTRUCTION JOINTS, IF REQUIRED IN PIER MUST BE AT LEAST 12 INCHES (305 mm) BELOW BOTTOM OF EMBEDMENTS AND MUST BE INTENTIONALLY ROUGHENED TO A FULL AMPLITUDE OF 1/4 INCH (6 mm). FOUNDATION DESIGN ASSUMES NO OTHER CONSTRUCTION JOINTS.
23. CASING, IF USED, SHALL NOT BE LEFT IN PLACE. EQUIPMENT, PROCEDURES, AND PROPORTIONS OF CONCRETE MATERIALS SHALL INSURE CONCRETE WILL NOT BE ADVERSELY DISTURBED UPON CASING REMOVAL. DRILLING FLUID, IF USED, SHALL BE FULLY DISPLACED BY CONCRETE AND SHALL NOT BE DETRIMENTAL TO CONCRETE OR SURROUNDING SOIL. CONTAMINATED CONCRETE SHALL BE REMOVED FROM TOP OF FOUNDATION AND REPLACED WITH FRESH CONCRETE.
24. TOP OF FOUNDATION SHALL BE SLOPED TO DRAIN WITH A FLOATED FINISHED. EXPOSED EDGES OF CONCRETE SHALL BE CHAMFERED 3/4" X 3/4" (19 mm X 19 mm) MINIMUM.
25. FOR ANCHOR BLOCK TYPE FOUNDATIONS, FOR GUYED TOWERS, ADDITIONAL CORROSION PROTECTION MAY BE REQUIRED FOR STEEL GUY ANCHORS IN DIRECT CONTACT WITH SOIL. DESIGN ASSUMES PERIODIC INSPECTIONS WILL BE PERFORMED OVER THE LIFE OF THE STRUCTURE TO DETERMINE IF ADDITIONAL ANCHOR CORROSION PROTECTION MEASURES MUST BE IMPLEMENTED BASED ON OBSERVED SITE-SPECIFIC CONDITIONS.

FILE NO.

REVISIONS

REV.	DESCRIPTION	DWN	CHK	APP
2	REVISED NOTE 7 TO 4500 PSI DATE: 2/10/2014	JHY	HA	HA

ROHN PRODUCTS
PO BOX 5999
PEORIA, IL 61601-5999
TOLL FREE 800-727-ROHN

THIS DRAWING IS THE PROPERTY OF ROHN. IT IS NOT TO BE REPRODUCED, COPIED OR TRACED IN WHOLE OR IN PART WITHOUT OUR WRITTEN CONSENT.

ANSI/TIA-222-G
STANDARD FOUNDATION NOTES

DWN: FAD	CHK'D: HA	DATE: Nov/20/2009
ENG'R: HA	SHEET #: 1 OF 1	
PRJ. ENG'R:	PRJ. MANG'R:	
DRAWING NO: B090548		REV: 2

FOUNDATION AND ANCHOR TOLERANCES

ALL FOUNDATIONS

1. CONCRETE DIMENSIONS: PLUS OR MINUS 1" (25mm)
2. DEPTH OF FOUNDATION: PLUS 3" (76mm) OR MINUS 0"
3. DRILLED FOUNDATIONS OUT OF PLUMB: 1.0°
4. REINFORCING STEEL PLACEMENT: PER A.C.I. 301
5. PROJECTION OF EMBEDMENTS: PLUS OR MINUS 1/8" (3mm)
6. VERTICAL EMBEDMENTS OUT OF PLUMB: 0.5°

ANCHOR BOLTS

7. MAXIMUM DISTANCE FROM CENTERLINE OF ANCHOR BOLTS TO CENTERLINE OF FOUNDATION: 1/24 OF PIER DIAMETER UP TO A MAXIMUM OF 2" (51mm)
8. ANCHOR BOLT SPACING: 1/16" (2mm)
9. ANCHOR BOLT CIRCLE ORIENTATION: 0.25°
10. ANCHOR BOLT CIRCLE DIAMETER: PLUS OR MINUS 1/16" (2mm)

SELF-SUPPORTING TOWERS

11. FACE SPREAD DIMENSION CENTER TO CENTER OF ANCHOR BOLT CIRCLES: PLUS OR MINUS 1/16" (2mm) OR 1/16" (2mm) PER 20 FT. (6m) OF FACE SPREAD
12. MAXIMUM DIFFERENCE BETWEEN ANY TWO FOUNDATION ELEVATIONS: 1/2" (13mm)

GUYED TOWERS

13. GUY RADIUS: PLUS OR MINUS 5% OF DISTANCE SPECIFIED
14. ANCHOR ELEVATION: PLUS OR MINUS 5% OF GUY RADIUS
15. ANCHOR ALIGNMENT (PERPENDICULAR TO GUY RADIUS): 1.0°
16. ANCHOR ROD SLOPE: PLUS OR MINUS 1.0°
17. ANCHOR ROD ALIGNMENT WITH GUY RADIUS: PLUS OR MINUS 1.0°
18. ANCHOR HEAD OUT OF PLUMB: 1.0°
19. GUY INITIAL TENSION: PLUS OR MINUS 10% OF TENSION SPECIFIED

NOTE: TOLERANCES IN NOTES 13 AND 14 CAN NOT OCCUR SIMULTANEOUSLY.

WARNING!!!

AFTER ANCHOR BOLTS ARE INSTALLED IN CONCRETE HAS TAKEN ITS INITIAL SET, ANCHOR BOLTS MUST NOT BE MOVED, BENT OR REALIGNED IN ANY MANNER. A NUT LOCKING DEVICE MUST BE INSTALLED ON ALL ANCHOR BOLTS.

FILE NO.

REVISIONS

REV.	DESCRIPTION	DWN	CHK	APP
9	UPDATED TITLE BLOCK DATE: 05/13/2015	JHY	JDM	HA

ROHN® PRODUCTS, LLC
PO BOX 5999
PEORIA, IL 61601-5999
TOLL FREE 800-727-ROHN

THIS DRAWING IS THE PROPERTY OF ROHN. IT IS NOT TO BE REPRODUCED, COPIED OR TRACED IN WHOLE OR IN PART WITHOUT OUR WRITTEN CONSENT.

FOUNDATION & ANCHOR TOLERANCE

DWN: CSR	CHK'D: KTL	DATE: 09/25/1987
ENG'R: XK	SHEET #: 1 OF 1	
PRJ. ENG'R:	PRJ. MANG'R:	
DRAWING NO: A810214	REV: 9	