AirSpeed 1030 B48
Product Datasheet

Revision: 1.3

Legal Notices

The information contained within this document is proprietary, privileged and intended only for the recipient. As such, the information is subject to all relevant copyright, patent and other laws protecting intellectual property, as well as any specific agreements protecting Airspan Networks Ltd. rights in the aforesaid information. Neither this document nor the information contained herein may be published, reproduced, transmitted or disclosed to third parties, in whole or in part, without the express, prior, written permission of Airspan Networks Ltd. In addition, any use of this document or the information contained herein for the purposes other than those for which it is disclosed is strictly forbidden.

Airspan Networks Ltd. reserves the right, without prior notice or liability, to make changes in equipment design or specifications.

Information supplied by Airspan Networks Ltd. is believed in good faith to be accurate and reliable, while every care has been taken in preparing these documents. However, Airspan Networks Ltd. does not make any representations and gives no warranties of whatever nature in respect of these documents, including without limitation, the accuracy or completeness of any information, facts and/or opinions contained therein. No responsibility is assumed by Airspan Networks Ltd. for the use of the documents nor for the rights of third parties which may be effected in any way by the use thereof. The provision of these documents (and the documents themselves) does not constitute professional advice of any kind. Any representation(s) in these documents concerning performance of Airspan Networks Ltd. product(s) are for informational purposes only and are not warranties of future performance, either expressed or implied. Airspan Networks Ltd., its affiliates, directors, employees and agents shall not be held liable for any damages or losses, of any nature whatsoever, arising from any use of and/or reliance on the documents.

These documents may contain flaws, omissions or typesetting errors; no warranty is granted nor liability assumed in relation thereto unless specifically undertaken in Airspan Networks Ltd. sales contract or order confirmation. Information contained herein is periodically updated and changes will be incorporated into subsequent editions. If you have encountered an error, please notify Airspan Networks Ltd.

Product performance figures quoted within this document are indicative and for information purposes only.

UK WEEE Registration number: WEEE/AB0207WZ. For more information, see WEEE Information for Airspan Customers and Recyclers.

1. PRODUCT INTRODUCTION:

1.1. AIRSPEED 1030 OVERVIEW

AirSpeed 1030 is a compact high power dual sector, dual-carrier, Small Cell solution. The AirSpeed 1030 is designed for installation on poles, walls or rooftops.
The product complies with CBRS CAT-B requirements and supports 52dBm/10MHz EIRP. The AirSpeed 1030 supports dual-carrier in a single sector via integrated antenna or dual-Carrier dual sector via external antenna.

1.2. PRODUCT VARIANTS

Band	Variant	Power	Backhaul	Downlink Freq.	Uplink Freq.	Tx Power
48	AS103-U48-B03DP	DC	SFP, Copper	3550-3700MHz		4x 33dBm

2. PHYSICAL

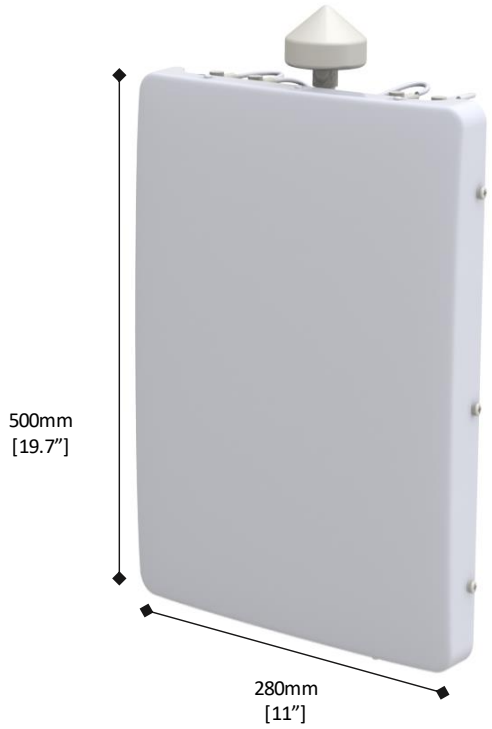

FIGURE 1: AIRSPEED 1030 DIMENSIONS

2.1. DIMENSIONS

Variant	Dimensions (H x W x D)
Total Size	11” x 19.7” x 5” (280 x 500 x 125 mm)

2.2. WEIGHT

Variant	Weight
AirSpeed 1030	7.5 Kg (without mounting adaptor)

2.3. OPERATIONAL ENVIRONMENT

Type	Details
Operating temperature	-40°C to 55°C / -40°F to 131°F
Operating humidity	5% - 100% non-condensing
Storage temperature	-40°C to 70° C / -40°F to 158°F
Storage humidity	5% - 100% non-condensing
Rain and dust ingress protection	IP66

2.4. POWER SOURCE

AirSpeed 1030 supports direct connection to DC power source.

- Operational Voltage Range: -40.5 to -57VDC

Power Source	Nominal Power Consumption (W)	Max Nominal Power Consumption (W)
DC	65	85

3. PHYSICAL INTERFACES

The following defines the AirSpeed 1030 Network and Maintenance interfaces, as well as System LEDs.
All interfaces are Weatherproof, supporting IP66 Ingress Protection Rating.

3.1. ENB INTERFACES

3.1.1. DC POWER CONNECTION

OCTIS connector for standard 48VDC power cable.

3.1.2. COPPER ETHERNET PORT

Connector Type	RJ45
Standard	IEEE802.3
Interface Speed	100/1000 Base-T
Quantity	1

RJ54 connector adaptor is required for copper Ethernet connectivity (optional accessory).

3.1.3. SFP ETHERNET INTERFACE

Weatherproofed interface to a pluggable SFP.
Supports standard 1000BaseX Ethernet SFPs.
SFP connector adaptor is required for fiber connectivity (optional accessory).
For a list of supported pluggable SFP modules please contact your Airspan representative.

3.1.4. GPS CONNECTOR

External interface for GPS connection (GPS is offered as an accessory).

Connector Type	TNC
Characteristic Impedance	50 Ω
Quantity	1

3.1.5. LED DISPLAY

Two tri-color LED (Green/Red/Orange), providing unit status indication.
These are software controlled to provide a visual indication of status of the unit. It can be turned off during normal operation.

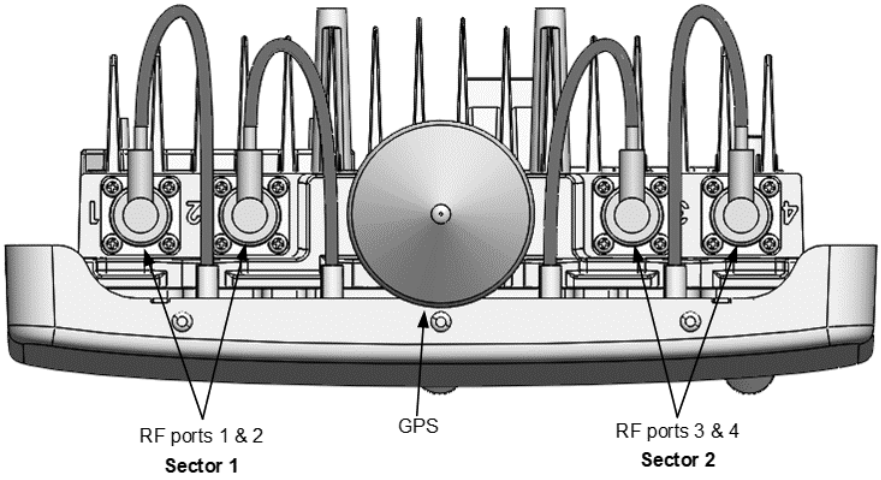

FIGURE 2: AIRSPEED 1030 TOP PORTS

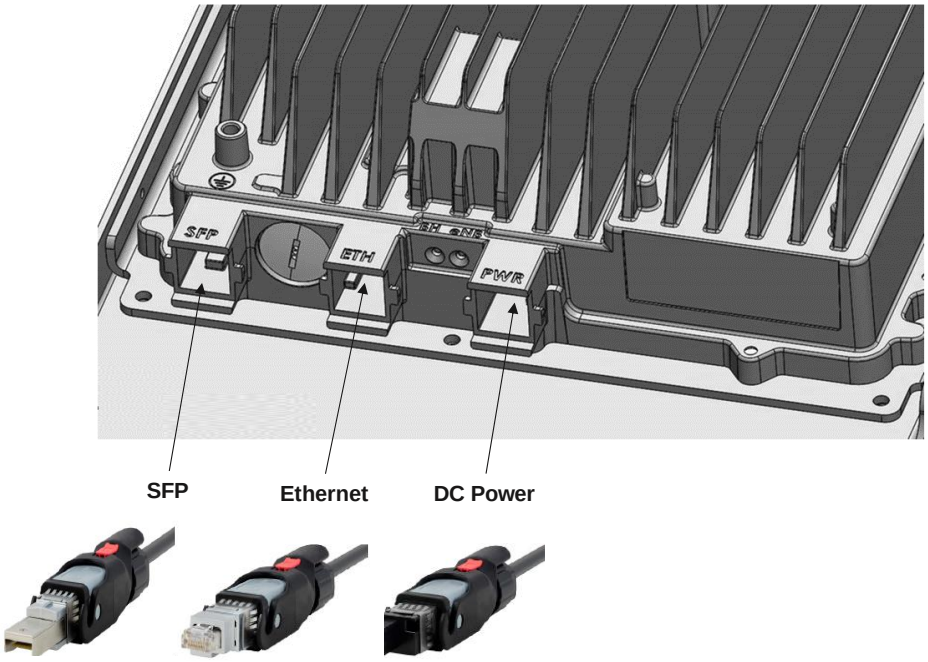

FIGURE 3: AIRSPEED 1030 BOTTOM PORTS

4. ANTENNAS (ENB)

AirSpeed 1030 includes two integrated front mount directional antennas, 2x 2x2.

Parameter	Value
Frequency	B48, 3550-3700MHz
Polarization	Dual Slant ±45°
Azimuth BW	65°±7°
Boresight gain	17 dBi ± 1dB
Elevation BW	8°±2°

The AirSpeed 1030 can work with dual port external antennas. Two antennas are required for AirSpeed 1030 (an antenna per carrier/sector). The external antennas must be DC grounded.

5. TRANSMITTER RADIO PERFORMANCE ACCESS (ENB)

5.1. CHANNEL FREQUENCY RESOLUTION

The center frequency is tunable with a 100 KHz resolution

5.2. FREQUENCY STABILITY

The AirSpeed 1030 reference frequency accuracy is better than ±0.05ppm

5.3. MODULATION & FEC

AirSpeed 1030 supports QPSK, 16QAM and 64QAM modulations on both Downlink and Uplink with the Modulation and Coding Schemes defined in 3GPP TS 36.211

5.4. TRANSMITTER POWER

Maximum Configurable Tx Power (per RF port)	33dBm
Transmit Power Accuracy	±1dB in normal conditions
Control Step	1dB

5.5. TRANSMITTER DYNAMIC RANGE

The transmitter supports a monotonic power control of 35dB with step size of 1dB

5.6. TRANSMITTER SPURIOUS EMISSIONS

AirSpeed 1030 complies with the “Category B” transmitter spurious emissions, as defined in TS 36.104

5.7. TRANSMITTER ERROR VECTOR MAGNITUDE

The AirSpeed 1030 transmitter EVM/RCE[3] is no more than -28dB for all power levels

6. Receiver Radio Performance Access (eNB)

6.1. Receiver Sensitivity Level[1]

The values in the table below are defined for QPSK ⅓ with allocation BW as indicated by TS 36.104

Channel Bandwidth (MHz)	Allocation Size (RB)	Reference Sensitivity Level (Typical)
10	25	-102dBm
20	25	-102dBm

6.2. In Channel Selectivity[2]

AirSpeed 1030 complies with ICS as defined by TS 36.104

6.3. Adjacent Channel Selectivity[3]

AirSpeed 1030 ACS complies with ACS requirements as defined in TS 36.104

6.4. Receive Dynamic Range

AirSpeed 1030's receiver has a dynamic range of 40dB

6.5. Maximum Input Signal

The AirSpeed 1030 receiver can receive a maximum on-channel signal of –55dBm

6.6. Maximum Input Signal without Damage

The AirSpeed 1030 receiver can tolerate a maximum signal of -10dBm without damage

6.7. Receiver Spurious Emission[4]

AirSpeed 1030 complies with the receiver spurious emission as defined by TS 36.104 as well as ETSI EN 301 893

6.8. Mobility

AirSpeed 1030 can support Intra and Inter frequency handovers.

[1] The receiver sensitivity power level is the minimum mean power received at the antenna connector at which a throughput requirement is being met for a specified reference measurement channel. The AirSpeed 1030 meets the requirements defined for in TS 36.104 for Medium Area Base Stations

[2] In-channel selectivity (ICS) is a measure of the receiver ability to receive a wanted QPSK½ signal at its assigned resource block locations in the presence of an interfering signal received at a larger power spectral density.

[3] Adjacent Channel Selectivity (ACS) is defined as the measure of the receiver's ability to receive a wanted signal at its assigned channel frequency in the presence of an adjacent channel signal with a specified center frequency offset of the interfering signal to the band edge of a victim system

[4] The spurious emissions are the power of emissions generated or amplified in a receiver that appear at the receiver antenna connector

7. Time and Frequency Synchronization

AirSpeed 1030 supports the following clock sources for providing the required Frequency and Phase accuracy:

- GPS,
- IEEE 1588 PTP
- Network Listening

The user can configure the priority of each clock source (if several are available), to determine the redundancy scheme between them. By default, GPS gets the highest priority.

8. Mounting

AirSpeed 1030 optional accessory kit for pole or wall mounting supports the following attributes:

Attribute	Values
Elevation Mechanical tilting range	-25° to +20°
Supported pole diameters	60-406mm (2.5”-16”)

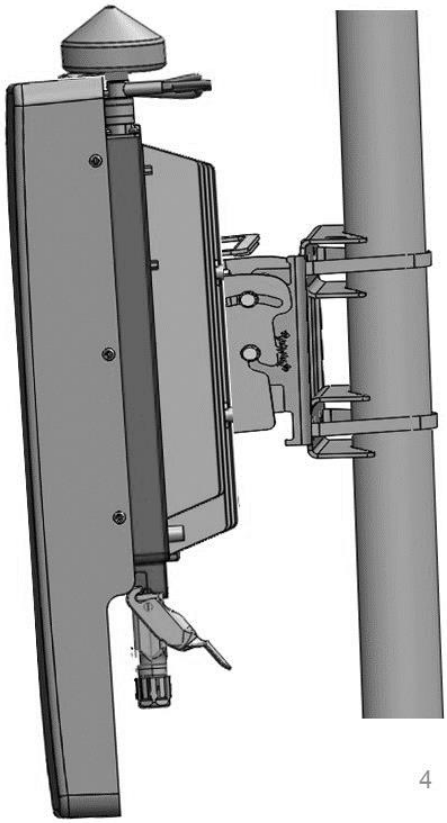

FIGURE 4: AIRSPEED 1030 MOUNTED ON POLE

9. STANDARD COMPLIANCE

	Standard
EMC	FCC 47 CFR Part 15:2014 Subpart B Class B
Safety	EN62368
ROHS	EU ROHS directive - 2002/95/EC (ROHS) - ROHS6
WEEE	Per the requirements of European directive 2002/96/EC
FCC	FCC 47 CFR Part 96
Environmental	IEC 60529
	IEC 60068
	ETSI EN 300-019-2-4 Operational (non-weather protected equipment)
	ETSI EN 300-019-2-1 Storage (weather protected, not temperature controlled locations)
	ETSI EN 300-019-2-2 Transportation (Public Transportation)
IP Rating	IP66