SPT2-5.2

0.6 M | 2 FT STANDARD PERFORMANCE PARABOLIC REFLECTOR ANTENNA, TRIPLE-POLARIZED, 5.25-5.85GHZ

The SP Standard Performance Series by RadioWaves offers a full line of cost effective standard performance parabolic antennas engineered to deliver reliable radio links. Designed for both unlicensed and licensed band applications, RadioWaves field-proven pre-assembled SP antennas and robust pole-mounts ensure “set and forget” installation with minimal post-installation maintenance. If it’s rugged, it must be RadioWaves!

FEATURES AND BENEFITS

- Standard Performance Parabolic Antennas – Excellent performance for a wide range of licensed and unlicensed applications
- Fully Preassembled at the Factory – Simplifies installation on site and guarantees “factory-tested” quality
- Warranty – Industry leading 7-year warranty

SPECIFICATIONS

General

Antenna Type	Standard Performance Parabolic Reflector Antenna
Size, nominal	2 ft | 0.6 m
Polarization	Triple

Standard RF Connector Type	N-Female
Standard RF Connector Suffix	NS (append suffix to model number)

Electrical

Operating Frequency Band	5.25 - 5.85 GHz
Half Power Beamwidth, Horizontal	6.1 degrees
Half Power Beamwidth, Vertical	6.1 degrees
Cross-Polarization Discrimination	6 dB
Front to Back Ratio (F/B)	36 dB

Gain, Low Frequency	24.8 dBi
Gain, Mid Frequency	25.3 dBi
Gain, High Frequency	25.8 dBi
VSWR	1.5:1
Return Loss	-14 dB

© RadioWaves, Inc. 2018. All Rights Reserved.

Mechanical

Fine Azimuth Adjustment	+/- 10 degrees	
Fine Elevation Adjustment	+/- 30 degrees	
Mounting Pipe Diameter, Min	2 inch | 5.08 cm	
Mounting Pipe Diameter, Max	4.5 inch | 11.4 cm	
Net Weight	22 lbs | 9.9 kg	26 lbs | 11.7 Kg with RD radome
Wind Velocity Operational	90 mph | 145 km/h	
Wind Velocity Survival Rating	125 mph | 201 km/h	

Mechanical Configuration	SP2	
Axial Force (FA)	222 lbs | 988 N	122 lbs | 543 Nm with RD radome
Side Force (FS)	14 lbs | 62 N	24 lbs | 107 Nm with RD radome
Twisting Moment (MT)	225 ft-lbs | 305 Nm	194 lbs | 263 Nm with RD radome
Operating Temperature Range	-40 to +60 C	
Max Pressure, PSIG, (if waveguide interface)	na	

Regulatory Compliance

FCC	undeclared
Industry Canada Compliance	undeclared

ETSI	undeclared
RoHS-compliant	Yes

Shipping Information

Package Type	Cardboard
Gross Weight	25 lbs | 11.3 kg

Dimensions, L x W x H	28 x 8 x 28in | 71 x 20 x 71 cm
Shipping Volume	3.63 cu ft | 0.1 cu m

*Additional OEM interfaces and adapters may be available. Contact RadioWaves for a complete and current list of available adapters.

© RadioWaves, Inc. 2018. All Rights Reserved.

TECHNICAL DRAWINGS

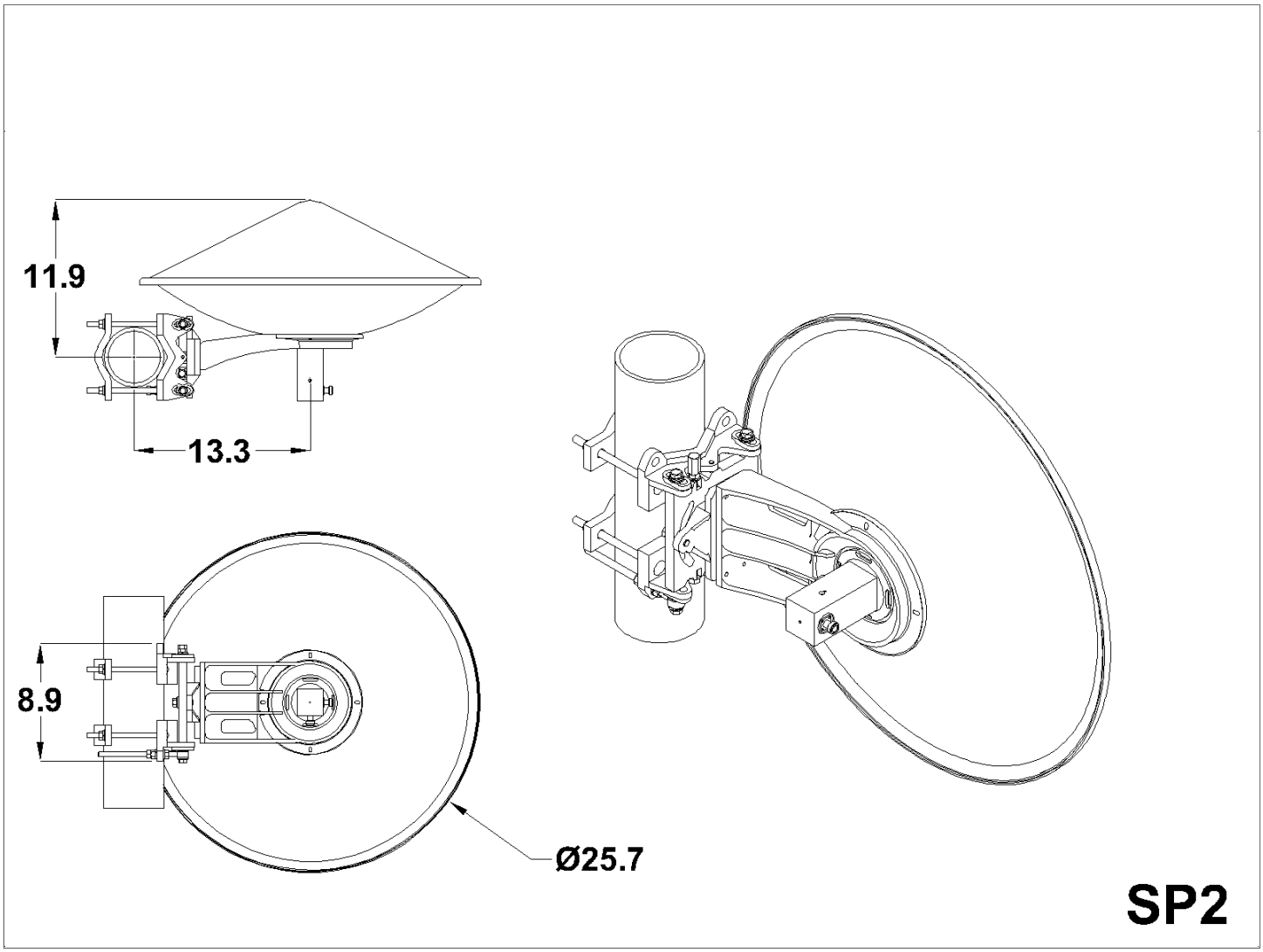

© RadioWaves, Inc. 2018. All Rights Reserved.